Parts List

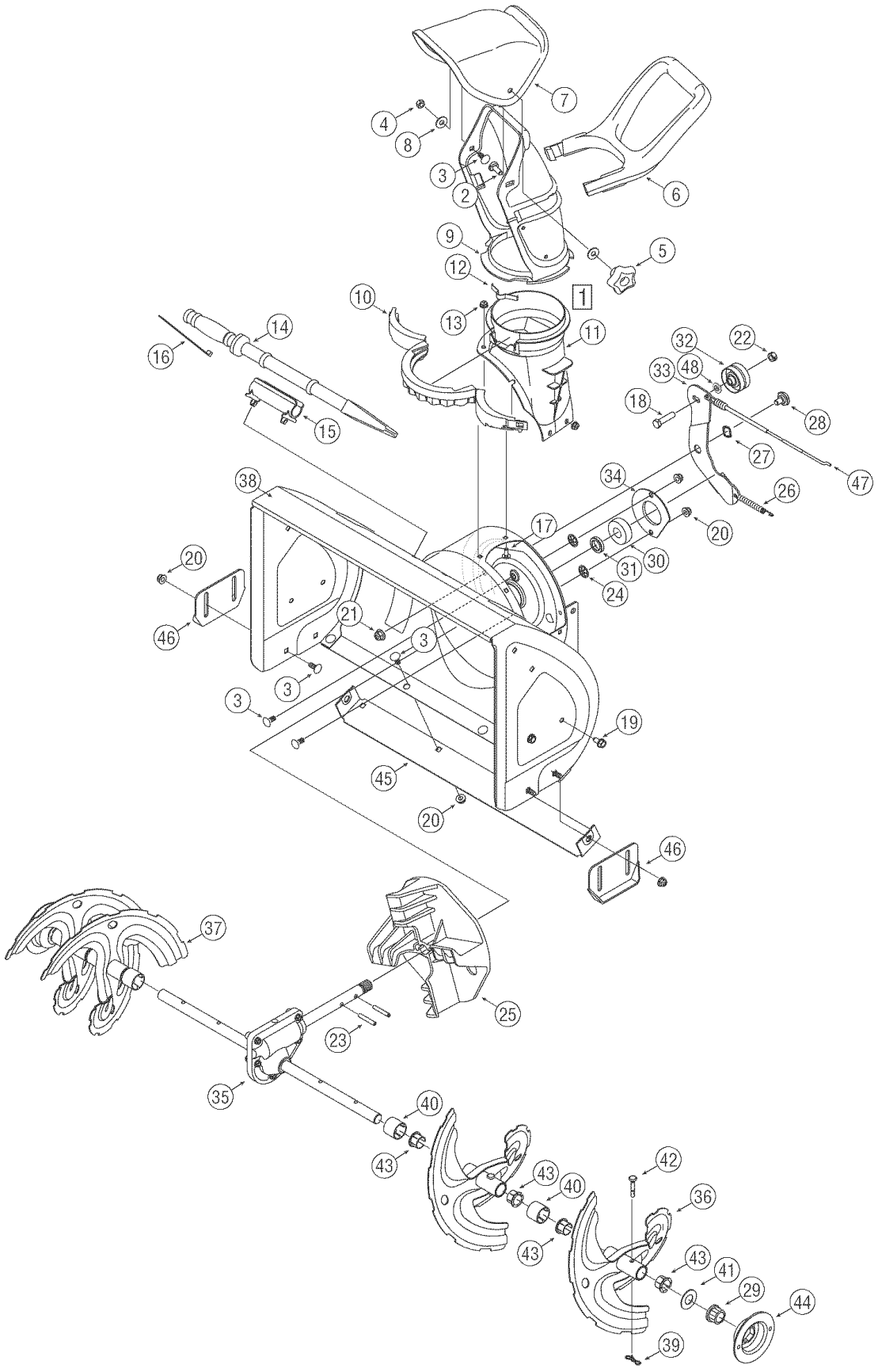

Parts List

REF NO.	PART NUMBER	DESCRIPTION	Qty.
1	684-04037	Chute Assembly	1
2	710-04071	Carriage Bolt 5/16-18 x 1.0"	1
3	710-0451	Carriage Bolt 5/16-18	11
4	712-3068	Flange Lock Nut, 5/16-18	1
5	720-0284	Nut Knob 5/16-18	1
6	731-04388A	Chute Handle	1
7	731-04426A	Upper Chute	1
8	736-0159	Flat Washer .349 x .879 x .063	2
9	731-04127	Lower Chute	1
10	731-04353	Chute Ring	1
11	731-2636A	Chute Adapter 5" Dia.	1
12	732-04111	Chute Adjustment Spring	1
13	712-04064	Flange Lock Nut 1/4-20	5
14	731-2643	Clean-out Tool	1
15	731-2635	Clean-out Tool Mount	1
16	725-0157	Cable Tie	1
17	710-0134	Carriage Screw 1/4-20 x 0.62"	5
18	710-0520	Hex Bolt 3/8-16 x 1.50"	1
19	710-0604A	AB Screw 5/16-18 x .625	4
20	712-04063	Flange Lock Nut, 5/16-18	10
21	712-04065	Flange Lock Nut, 3/8-16	1
22	712-0266	Hex Lock Nut 3/8-16	1
23	715-04020	Spiral Pin	2
24	726-04012	Push On Nut	2

REF NO.	PART NUMBER	DESCRIPTION	Qty.
25	731-04218B	Impeller	1
26	732-0611	Extension Spring	1
27	736-0174	Wave Washer	1
28	738-0281	Shoulder Screw 3/8-16	1
29	741-0245	Hex Flange Bearing	2
30	741-0309	Ball Bearing	1
31	750-04191	Spacer	1
32	756-04035	Flat Idler	1
33	784-0434	Auger Idler Bracket	1
34	790-00075	Bearing Housing	1
35	618-04293	Auger Gearbox Assembly	1
36	684-04113	Auger Assembly - LH	2
37	684-04114	Auger Assembly - RH	2
38	684-04165	Auger Housing, 24"	1
39	714-04040	Bow Tie Cotter Pin 72	4
40	731-04870	Spacer, 1.25 x.75 x 1.00	4
41	736-0351	Flat Washer	2
42	738-04124A	Shear Pin,.25 x 1.50	4
43	741-0493A	Flange Bushing	8
44	790-00087A	Hex Bearing Housing	2
45	790-00120	Shave Plate 2.25 x 23.66 LG	1
46	784-5580	Skid Shoe	2
47	746-04246	Auger Cable	1
48	736-0258	Flat Washer	1

Parts List

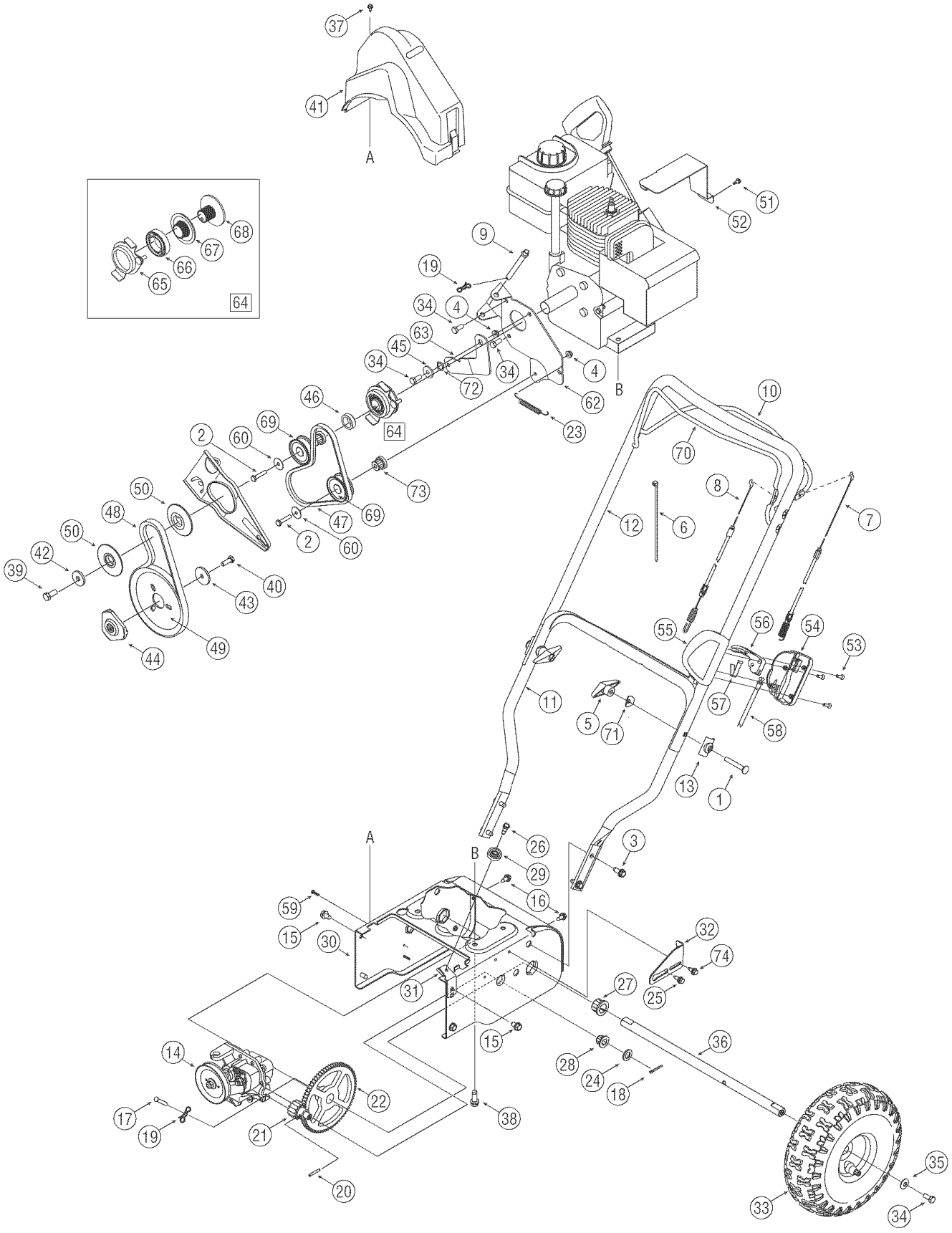

37
41
A
51
52
68
67
66
65
64
9
19
34
4
63
45
34
72
34
4
B
62
23
46
64
69
2
60
73
50
48
47
69
2
60
50
42
39
40
43
49
44
10
70
8
7
12
6
55
56
54
53
11
57
5
71
58
13
1
A
B
26
3
29
16
59
15
30
32
74
31
27
25
15
36
14
28
24
18
22
17
19
21
38
20
35
33
34

Parts List

REF NO.	PART NUMBER	DESCRIPTION	Qty.
1	710-0449	Carriage Screw 5/16-18 x 2.25"	2
2	710-0106	Hex Screw 1/4-20 x 1.25"	2
3	710-1260A	Screw, 5/16-18 x .75"	4
4	712-04064	Flange Lock Nut 1/4-20	2
5	720-0284	Lock Nut Knob 5/16-18	2
6	725-0157	Cable Tie	3
7	746-04256	Drive Cable	1
8	746-04246	Auger Cable	1
9	711-04478	Pivot Rod	1
10	747-04405	Drive Control	1
11	749-04147	Lower Handle	1
12	749-04236	Upper Handle	1
13	790-00053	Handle Tab	2
14	618-04296	Transmission Assembly	1
15	710-0604A	AB Screw 5/16-18 x .625	4
16	710-0809	Screw, 1/4-20 x 1.25"	2
17	711-1364	Clevis Pin	1
18	714-0115	Cotter Pin, 1/8 x 1.0	2
19	714-04040	Bow Tie Cotter Pin 72	2
20	715-0249	Roll Pin	1
21	717-04066	Pinion 14T	1
22	717-04073A	Gear 70T	1
23	732-0409	Extension Spring	1
24	736-0192	Flat Washer	2
25	738-04184	Shoulder Screw 1/4-20	1
26	738-0924	Carriage Screw 1/4-28	1
27	741-0245	Hex Flange Bearing	2
28	741-04108	Hex Flange Bearing	2
29	756-0625	Cable Roller	1
30	784-0419B	Drive Housing Frame	1
31	790-00223	Auger Cable Bracket	1
32	790-00224	Auger Cable Adj. Bracket	1
33	634-0232A	Wheel Assembly Snow Hog Gray	2
34	710-0627	Lock Bolt 5/16-24 x 0.75"	5
35	736-0242	Bell Washer	2
36	738-1231	Axle	1
37	710-0224	Hex Screw, #10-16 x.500	1

REF NO.	PART NUMBER	DESCRIPTION	Qty.
38	710-0654A	TT Sems Screw 3/8-16 x 1.0"	4
39	710-0696	Hex Bolt 3/8-24 x 0.875"	1
40	710-1245B	Lock Bolt 5/16-24 x 0.875"	1
41	731-05364	Belt Cover	1
42	736-0247	Flat Washer,.406ID x 1.25OD	1
43	736-0505	Flat Washer,.34ID x 1.50OD	1
44	748-04067	Pulley: Adapter,.75 Dia.	1
45	748-0234	Shoulder Spacer	1
46	750-04568	Shoulder Spacer	1
47	754-04102	V-Belt, 3L x 25.00 LG	1
48	754-04014	V-Belt, 3/8 x 26.680 Lg.	1
49	756-04024	Auger Pulley	1
50	756-0569	Pulley Half	2
51	710-0456	Screw, #10-16 x.500	1
52	790-00064	Heat Shield	1
53	710-1667A	Screw #10-16	3
54	731-05358	Speed Selector Housing - Lwr	1
55	731-05359	Speed Selector Housing - Upr	1
56	731-05360	Speed Selector Housing-Lever	1
57	732-0627	6 Speed Shift Lever Spring	1
58	746-04244	Speed Control Cable	1
59	710-04329	Screw .159 x .610	2
60	736-3092	Flat Washer .265 x 1.0 x .030	2
61	782-7596A	6-Speed Control Arm	1
62	790-00234	Actuator Mounting Bracket	1
63	790-00235	Drive Wheel Idler Bracket	1
64	656-0613	Multi-Speed Pulley Assembly	1
65	682-7527	6 Speed Assembly Cup	1
66	741-0545	Ball Bearing	1
67	756-0613	Pulley Half	1
68	756-0612A	Drive Pulley Half	1
69	684-04168	Idler Pulley Assembly	2
70	747-04394	Auger Control Bail	1
71	736-0451	Saddle Washer	2
72	736-0232	Wave Washer .531 x .781 x .013	1
73	750-04571	Shoulder Spacer .60 x .790 x .538	2
74	710-1652	Screw, 1/4-20 x 1.25"	1

Parts List

Tecumseh 5.5 H.P. Engine LH195SP - 67517D

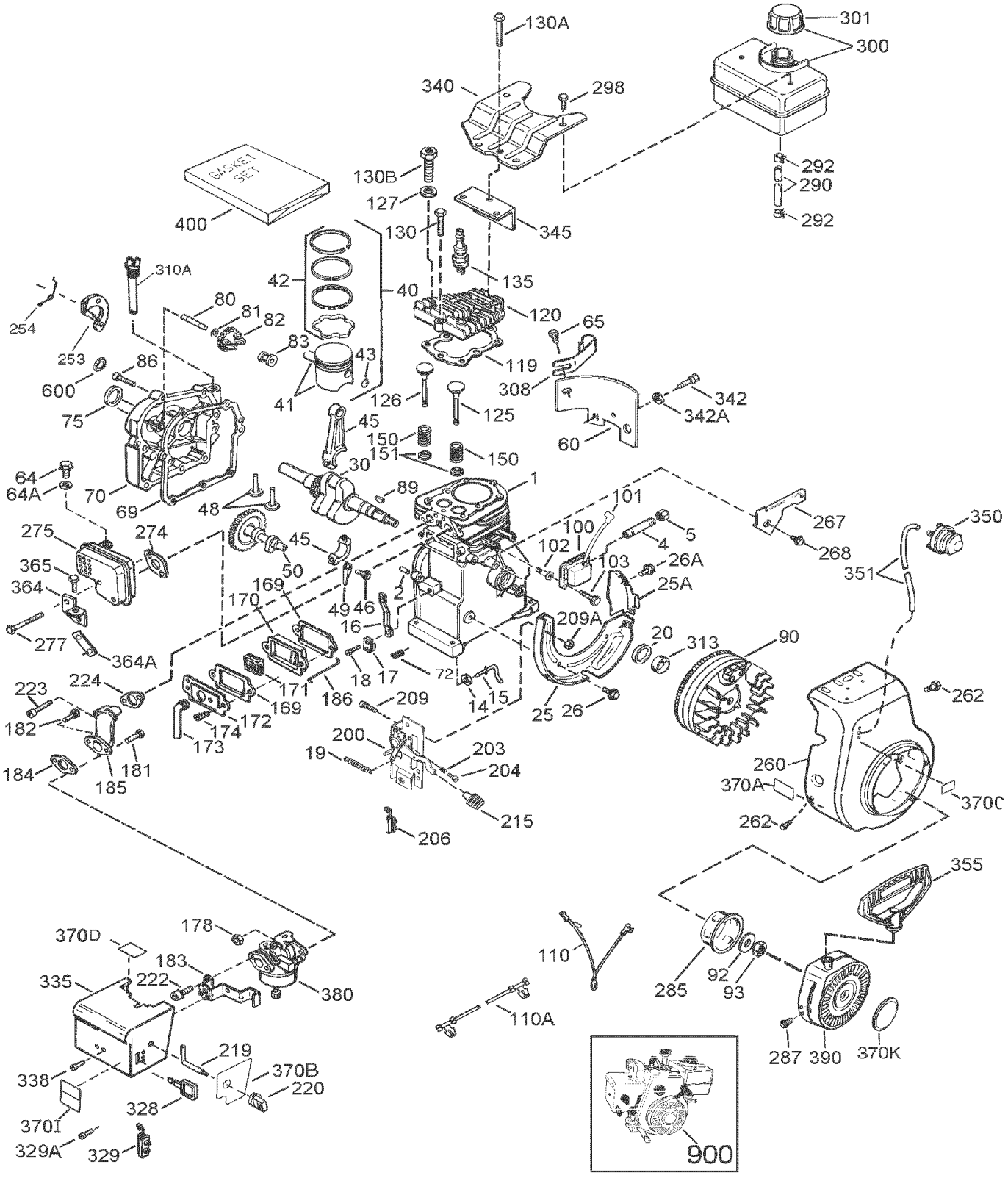

Parts List

Tecumseh 5.5 H.P. Engine LH195SP - 67517D

REF NO.	PART NUMBER	DESCRIPTION	Qty.
1	36469A	Cylinder (Incl. 2,20,72 & 125)	1
2	26727	Dowel Pin	2
5	30969	Extension Cap (1/4-18 NPT)	1
14	28277	Washer	1
15	31334	Governor Rod	1
16	37729	Governor Lever	1
17	31335	Governor Lever Clamp	1
18	651018	Screw, T-15, 8-32 x 19/64"	1
19	31426	Throttle Spring	1
20	32600	Oil Seal	1
25	36552	Blower Housing Baffle (Incl. 2)	1
25A	35883	Baffle Extension	1
26	650802	Screw, 1/4-20 x 5/8"	2
26A	650926	Screw, 8-32 x 21/64"	1
30	37842	Crankshaft	1
40	36073	Piston, Pin & Ring Set (Std.)	1
40	36074	Piston, Pin & Ring Set (.010")	1
40	36075	Piston, Pin & Ring Set (.020")	1
41	36070	Piston & Pin Ass'y. (Std.) (In)	1
41	36071	Piston & Pin Ass'y. (.010" OS) Incl. 43	1
41	36072	Piston & Pin Ass'y. (.020" OS) Incl. 43	1
42	36076	Ring Set (Std.)	1
42	36077	Ring Set (.010" OS)	1
42	36078	Ring Set (.020" OS)	1
43	20381	Piston Pin Retaining Ring	2
45	32875A	Connecting Rod Ass'y. (Incl. 4)	1
46	32610A	Connecting Rod Bolt	2
48	37670	Valve Lifter	2
49	32654	Oil Dipper	1
50	37671	Camshaft (MCR)	1
60	29745	Blower Housing Extension	1
64	30063	Screw, T-30, 1/4-20 x 1/2"	1
64A	8345	Washer	1
65	650128	Screw, 10-24 x 1/2" (1/4-18 NPT x 4-3/4)	1
69	27677A	* Cylinder Cover Gasket	1
70	34674C	Cylinder Cover (Incl. 75 thru	2
72	27642	Oil Plug	2
75	27897	Oil Seal	1
80	30574A	Governor Shaft	1
81	30590A	Washer	1
82	30591	Governor Gear Assembly (Incl.	1
83	30588A	Governor Spool	1

REF NO.	PART NUMBER	DESCRIPTION	Qty.
86	650488	Screw, 1/4-20 x 1-1/4"	7
89	610961	Flywheel Key	1
90	611195	Flywheel	1
92	650815	Belleville Washer	1
93	650816	Flywheel Nut	1
100	34443C	Solid State Ignition	1
101	610118	Spark Plug Cover	1
102	651024	Solid State Mounting Stud	2
103	651007	Screw, T-15, 10-24 x 15/16"	2
110	35182	Ground Wire	1
110A	36874	Ground Wire	1
119	36443	* Cylinder Head Gasket	1
120	37675	Cylinder Head (Incl. 131)	1
125	36471	Exhaust Valve (Std.) (Incl. 15)	1
125	36472	Exhaust Valve (1/32" OS) (Incl.)	1
126	32644A	Intake Valve (Std.) (Incl. 151)	1
127	650691	Washer	1
130	6021A	Screw, 5/16-18 x 1-1/2"	2
130A	650694A	Screw, 5/16-18 x 2"	5
130B	650818	Screw, 5/16-18 x 1-1/2"	1
135	35395	Resistor Spark Plug (RJ19LM)	1
150	31672	Valve Spring	2
151	31673	Valve Spring Cap	2
169	27234A	* Valve Cover Gasket |2|	2
170	27666	Breather Body	1
171	31410	Breather Element	1
172	34146	Valve Cover	1
173	35350	Breather Tube	1
174	650783	Screw, 10-24 x 3/4"	2
178	29752	Nut & Lock Washer, 1/4-28"	2
181	650870	Screw, 1/4-28 x 1-11/16"	1
182	6201	Screw, 1/4-28 x 7/8"	1
183	34583A	Choke bracket	1
184	26756	* Carburetor To Intake Pipe Ga	1
185	33691	Intake Pipe	1
186	32698	Governor Link	1
200	36677	Control Bracket (Incl. 203 thr	1
203	31342	Compression Spring	1
204	651029	Screw, T-10, 5-40 x 7/16"	1
206	610973	Terminal	1
215	35440	Control Knob	1
219	34582	Choke Rod	1

Parts List

Tecumseh 5.5 H.P. Engine LH195SP - 67517D *(Continued from previous page)*

REF NO.	PART NUMBER	DESCRIPTION	Qty.
220	35438	Choke Knob	1
222	28820	Screw, 10-32 x 1/2"	2
223	650664	Screw, 1/4-20 x 1-19/32"	2
224	33673A	*Intake Pipe Gasket	1
253	36701	Compression Release Weight	1
254	36702	Compression Release Spring	1
260	35656A	Blower Housing	1
262	650737	Screw, 1/4-20 x 1/2"	2
267	34212	Hold Down Bracket	1
268	30200	Screw, 10-24 x 9/16"	1
274	33670A	*Exhaust Gasket	1
275	35771A	Muffler (Incl. 274)	1
277	792005	Screw, 1/4-20 x 2-1/2"	2
285	36467A	Starter Cup	1
287	650926	Screw, 8-32 x 21/64"	2
290	30705	Fuel Line	1
292	26460	Fuel Line Clamp	2
298	650665	Screw, 1/4-15 x 3/4"	2
300	35584	Fuel Tank (Incl. 292 & 301)	1
301	37845	Fuel Cap	1
310	35556	Dipstick	1
311	37246	Oil Fill Plug	1
312	27625	Oil Fill Plug Gasket	1
313	34080	Spacer	1
328	35062	Ignition Key	2
329	610973	Terminal	1
329A	651060	Screw, 8-32 x 23/64"	1
335	35072	Carburetor Cover	1
338	650257	Screw, 8-32 x 5/16"	2
340	36247	Fuel Tank Bracket	1
342	30063	Screw, T-30, 1/4-20 x 1/2"	1
342A	650675	Washer	2
345	33344	Heat Baffle	1
350	570682A	Primer Assembly	1
351	32180C	Primer Line	1
355	590574	Starter Handle (Mitten Grip)	1
364	33333	Carburetor Cover Bracket	1
364A	37673	Locking Plate	1
365	650735	Screw, 10-24 x 3/8"	1
370A	36261	Instruction Decal	1
370B	35282	Speed Control Decal	1
370C	36501	Primer Decal	1
370D	36534	Caution Decal	1
370I	37119	Warning Decal	1
370K	36695	Starter Decal	1
380	640084B	Carburetor (Incl. 184)	1
390	590742	Rewind Starter †	1
396	33290E	Electric Starter Motor 110 Volt	0
396	730266	Electric Starter Kit (Optional) ††	0
400	36444	* Gasket Set	1
600	651013	Washer	1
900	754336	Replacement Short Block, order 71-999	1

† This engine may have been built with the 590707 starter.

†† (120V) Starter Kit,18-watt flywheel w/ring gear, 18-watt alternator, and mounting hardware.

* Included in this Gasket Set.

NO.	PART No.	DESCRIPTION	Qty.
0	590742	Rewind Starter	1
3	590740	Retainer	1
6	590616	Starter Dog	2
7	590617	Dog Spring	2
8	590645A	Pulley & Rewind Spring Ass'y	1
11	590647A	Starter Housing Ass'y	1
12	590535	Starter Rope (Length 98" x 9/64" dia.)	1
13	590574	Mitten Grip Handle (Not included w/starter)	1
14	590760	Spring Clip	1

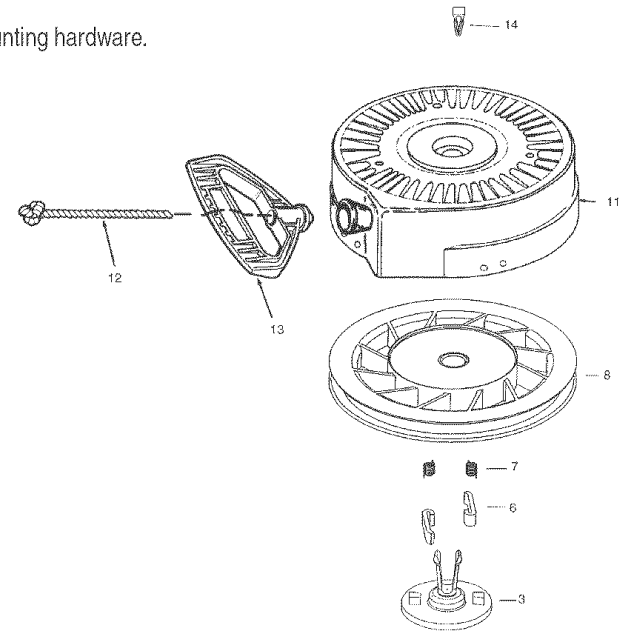

Parts List

Tecumseh 5.5 H.P. Engine LH195SP - 67517D

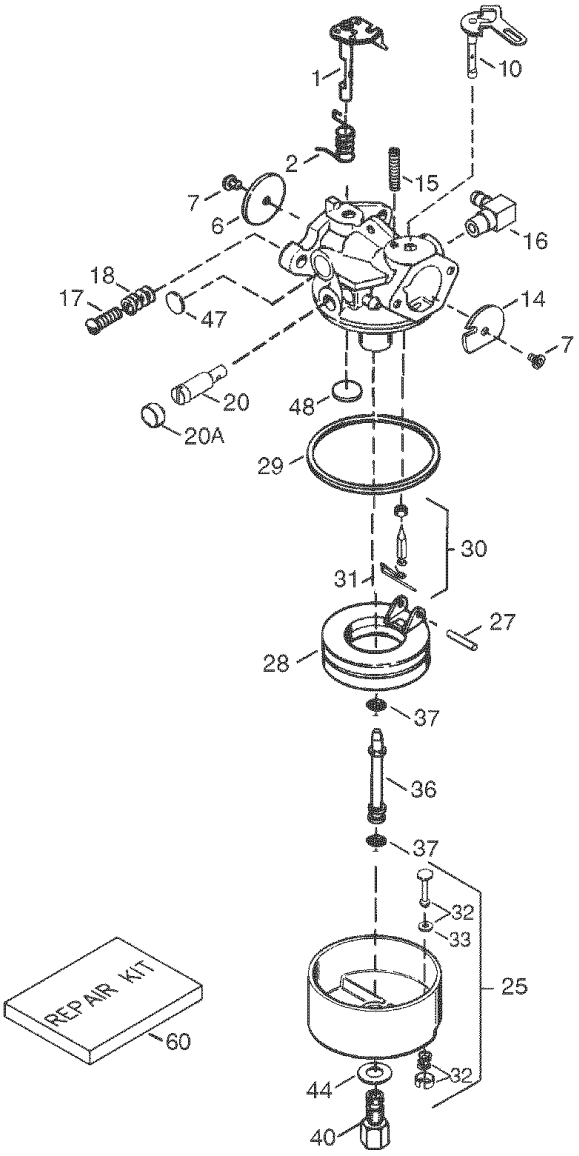

REF NO.	PART NUMBER	DESCRIPTION	Qty.
0	640084B	Carburetor (Incl. 184 of Engine Parts List)	1
1	631615	Throttle Shaft & Lever Assembly	1
2	631767	Throttle Return Spring	1
6	640070	Throttle Shutter	1
7	650506	Shutter Screw †	2
10	632108	Choke Shaft & Lever Assembly	1
14	631890	Choke Shutter	1
15	630735	Choke Positioning Spring	1
16	631807	Fuel Fitting	1
17	651025	Throttle Crack Screw/Idle Speed Screw	1
18	630766	Tension Spring	1
20	640027	Idle Restrictor Screw	1
20A	640053	Idle Restrictor Screw Cap	1
25	631951	Float Bowl Assembly (Incl. 32 & 33)	1
27	631024	Float Shaft †	1
28	632802	Float (Plastic)	1
29	631028	Float Bowl O-Ring †	1
30	631021A	Inlet Needle, Seat & Clip (Incl. 31) †	1
31	631022	Spring Clip	1
32	27136A	Bowl Drain Assembly	1
33	27554	Drain Plunger Gasket †	1
36	632745	Main Nozzle Tube	1
37	632547	O-Ring, Main Nozzle Tube †	2
40	640131	High Speed Bowl Nut	1
44	27110A	Bowl Nut Washer †	1
47	630748	Welch Plug, Idle Mixture Well †	1
48	631027	Welch Plug, Atmospheric Vent †	1
60	632760B	Repair kit (Incl. Items Marked † in Notes)	1
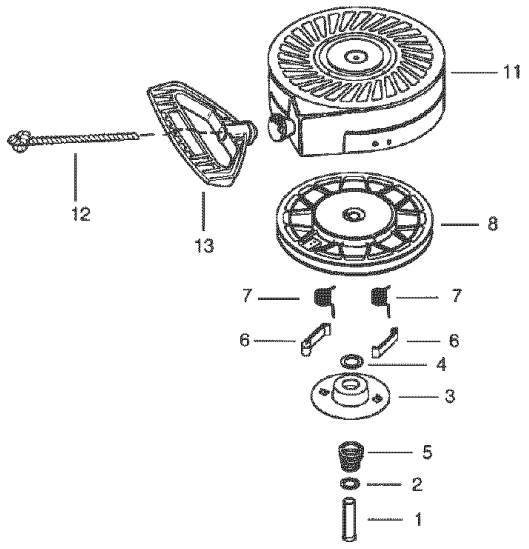
NO.	PART No.	DESCRIPTION	Qty.
0	590707	Recoil Starter	0
1	590599A	Spring Pin (Incl. 4)	1
2	590600	Washer	1
3	590696	Retainer	1
4	590601	Washer	1
5	590697	Brake Spring	1
6	590698	Starter Dog	2
7	590699	Dog Spring	2
8	590709	Pulley & Rewind Spring Ass'y.	1
11	590708	Starter Housing Ass'y.	1
12	590535	Starter Rope (98" X 9/64" dia.)	1
13	590574	Mitten Grip Handle(Not included with starter)	1